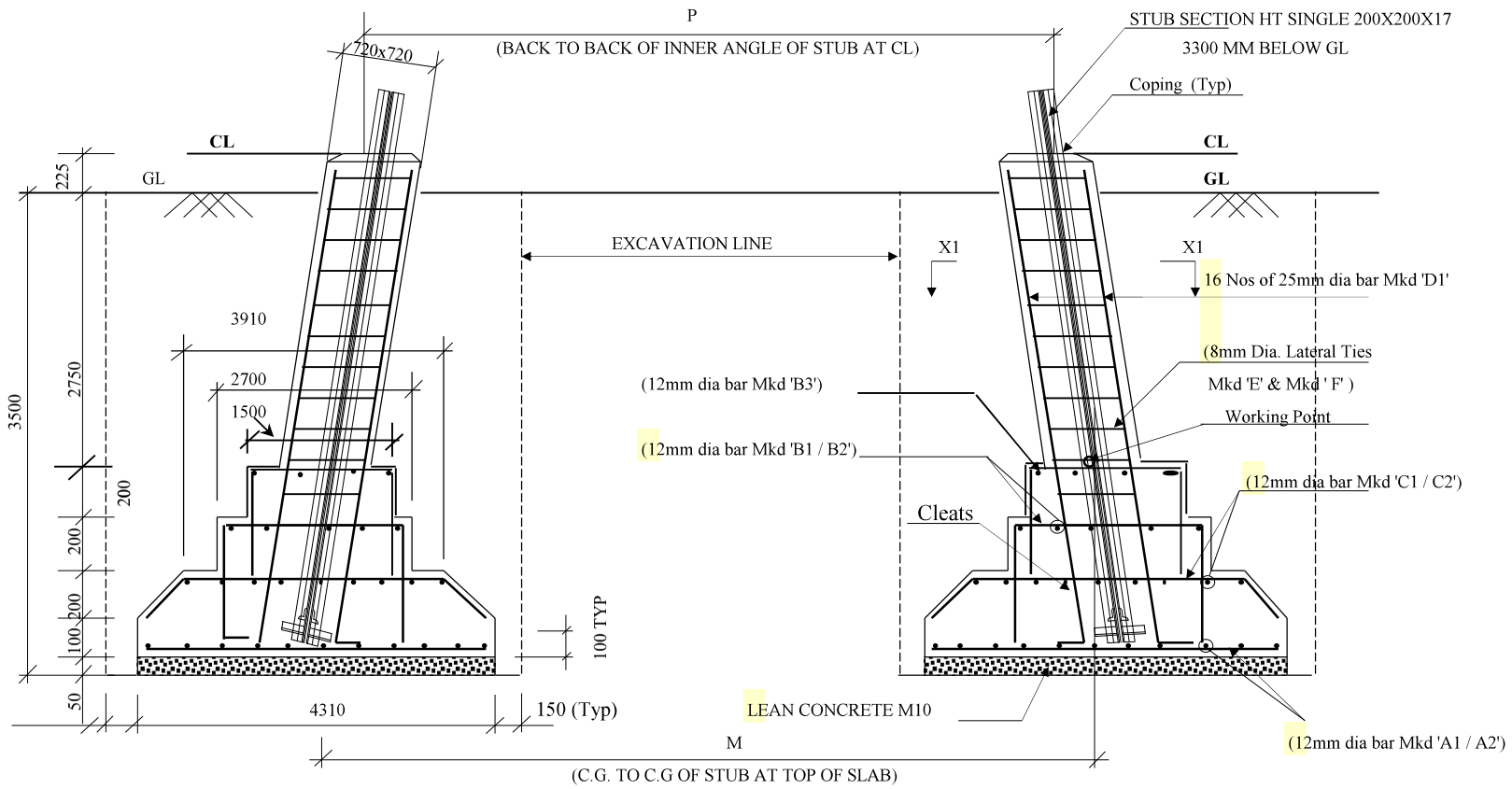

BAR BENDING SCHEDULE

Mkd No	SKETCH	Dia in MM	Length in MM	Nos/ Leg	Unit Wt (Kg/m)	Wt/ Leg (Kg)	Total weight (Kg)
A1	4210	12	4210	38	0.888	142.062	568.248
A2	3610	12	3610	38	0.888	121.816	487.264
B1	2600 (350, 100, 350)	12	3500	24	0.888	74.592	298.368
B2	2600 (350, 100, 350)	12		0	0.888	0.000	
B3	1400 (300, 100, 300)	12	2200	24	0.888	46.886	187.544
C1	3810 (233, 100, 233)	12	4476	12	0.888	47.696	190.784
C2	1349 (233)	12	1582	36	0.888	50.573	202.292
D1	3526 (300)	25	3826	16	3.853	235.865	943.460
D2	3526 (300)	0	3826	0	0.000	0.000	0.000
E	620, 620	8	2630	13	0.395	13.505	54.020
F	421	8	1834	13	0.395	9.418	37.672
G	620, 323	8	2036	26	0.395	20.910	83.640
H	0	8	150	0	0.395	0.000	0.000
						Total weight of steel required in Kg =	3053.292

Quantities / Tower

Excavation	=	297.53	cum.
Concrete (1:1.5:3)	=	34.76	cum.
Concrete (1:3:6)	=	3.72	cum.
Reinforcement	=	3053.29	kg

Excavation plan details Slope = 0.2607

Level	CG of stub	P in mm	M in mm	N in mm
-6 M	55.6	14296	15732	22248
-4.5 M	55.6	15078	16514	23354
-3 M	55.6	15860	17296	24460
-1.5 M	55.6	16642	18078	25566
0 M	55.6	17424	18860	26672

THE FOUNDATION HAS BEEN DESIGNED
FOR FOLLOWING PARAMETERS
TYPES OF SOIL : DRY
UNIT WEIGHT: 1440 / 1440 Kg/CuM
BEARING CAPACITY : 27350 Kg/m2
ANGLE OF REPOSE: 30 / 30 Degrees
WATER TABLE = > 3.5 M BELOW GL

This document is approved by ED-Engg. vide E-Office File No. CC-EgTL-15-12/0073/2023/NR Grp (Computer No. 700678), dated: 22/September/2023

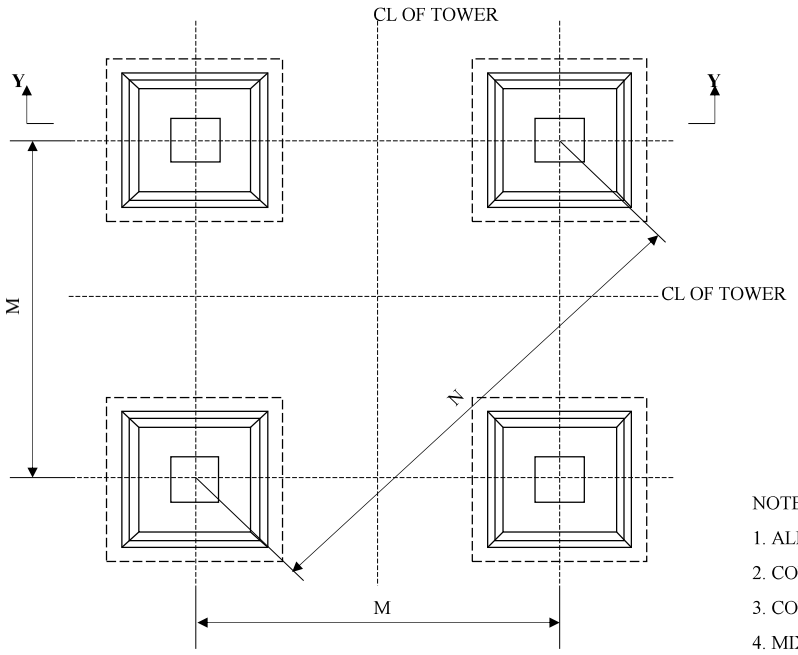

PLAN

DETAILS OF FOUNDATION

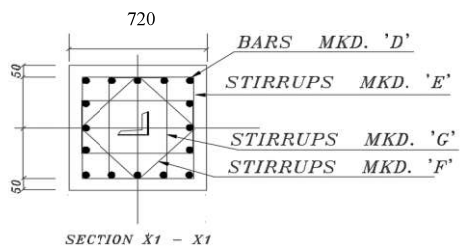

NOTES

1. ALL DIMENSIONS ARE IN MM. UNLESS OTHER WISE SPECIFIED
2. CONCRETE GRADE IS M 20 UNLESS OTHERWISE SPECIFIED.
3. CONCRETE COVER IS 50mm UNLESS OTHERWISE STATED.
4. MIX PROPERTIES CONFIRMING TO IS 456-2000.
5. STEEL USED IS Fe500 CONFORMING TO IS 1786, 1985 INDICATED AS 'TOR'
6. WHEREVER NECESSARY TO CLEAR STUB & CLEAT STIRRUPS ARE TO BE ADJUSTED AT SITE
7. FOR DETAILS OF STUB & CLEATS, REFER STUB DRAWING
8. **FOR ARRANGEMENT OF BARS REFER DRG. NO. CC:ENGG:TL:3 STEP:BAR ARRANGEMENT**

THIS DRAWING IS APPLICABLE ONLY FOR TOWER WITH EQUAL LEG/BODY EXTENSION AND SHALL NOT BE USED FOR UNEQUAL LEG EXTENSIONS.

पावरग्रिड POWERGRID
पावर ग्रिड कॉर्पोरेशन ऑफ इंडिया लिमिटेड
(भारत सरकार का उद्यम)
POWER GRID CORPORATION OF INDIA LIMITED
(A Government of India Enterprise)

400 kV D/C Transmission Line with QUAD ACSR MOOSE NEW BUTWAL-GORAKHPUR TL

Title : Construction Drawing of Foundation
For Tower Type: DB (-6/-4.5/-3/-1.5/+0) Extn
Foundation Type :DRY (+0M BODY EXTN.)
(WIND ZONE- 5)

CLEARED BY			
S. DGM (ENGG-TL)	CGM (ENGG-TL)	ED (ENGG.)	DGM (ENGG-TL)

Rev No	DATE	DESCRIPTION	ISSUED BY	CHKD	APPD	DATE	DESIGN	CHKD

Scale N.T.S
Drawing No. CC:ENGG:TL: 4522-41M-P-1-5701A

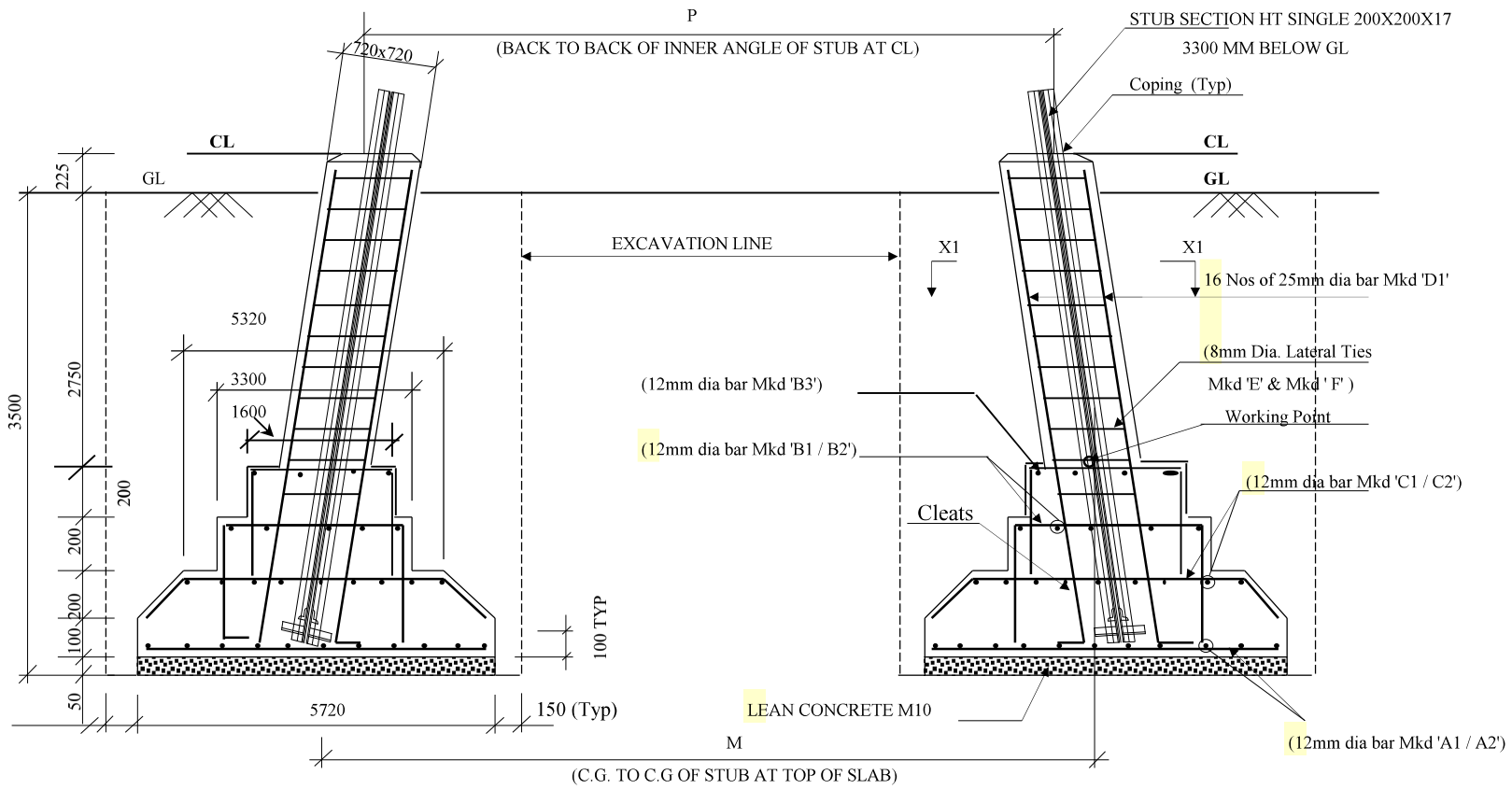

BAR BENDING SCHEDULE

Mkd No	SKETCH	Dia in MM	Length in MM	Nos/ Leg	Unit Wt (Kg/m)	Wt/ Leg (Kg)	Total weight (Kg)
A1	5620	12	5620	54	0.888	269.490	1077.960
A2	4580	12	4580	54	0.888	219.620	878.480
B1	3200 (350, 100, 350)	12	4100	30	0.888	109.224	436.896
B2	3200 (350, 100, 350)	12		0	0.888	0.000	
B3	1500 (300, 100, 300)	12	2300	24	0.888	49.018	196.072
C1	5220 (233, 100, 233)	12	5886	20	0.888	104.535	418.140
C2	2004 (233)	12	2237	56	0.888	111.242	444.968
D1	3526 (300)	25	3826	16	3.853	235.865	943.460
D2	3526 (300)	0	3826	0	0.000	0.000	0.000
E	620, 620	8	2630	13	0.395	13.505	54.020
F	421	8	1834	13	0.395	9.418	37.672
G	620, 323	8	2036	26	0.395	20.910	83.640
H	0	8	150	0	0.395	0.000	0.000
						Total weight of steel required in Kg =	4571.308

Quantities / Tower

Excavation	=	507.37	cum.
Concrete (1:1.5:3)	=	54.40	cum.
Concrete (1:3:6)	=	6.54	cum.
Reinforcement	=	4571.31	kg

Excavation plan details Slope = 0.2607

Level	CG of stub	P in mm	M in mm	N in mm
-6 M	55.6	14296	15732	22248
-4.5 M	55.6	15078	16514	23354
-3 M	55.6	15860	17296	24460
-1.5 M	55.6	16642	18078	25566
0 M	55.6	17424	18860	26672

THE FOUNDATION HAS BEEN DESIGNED
FOR FOLLOWING PARAMETERS
TYPES OF SOIL : WET
UNIT WEIGHT: 1440 / 940 Kg/CuM
BEARING CAPACITY : 13675 Kg/m2
ANGLE OF REPOSE: 30 / 15 Degrees
WATER TABLE = 1.50 TO 3.5 M FROM GL

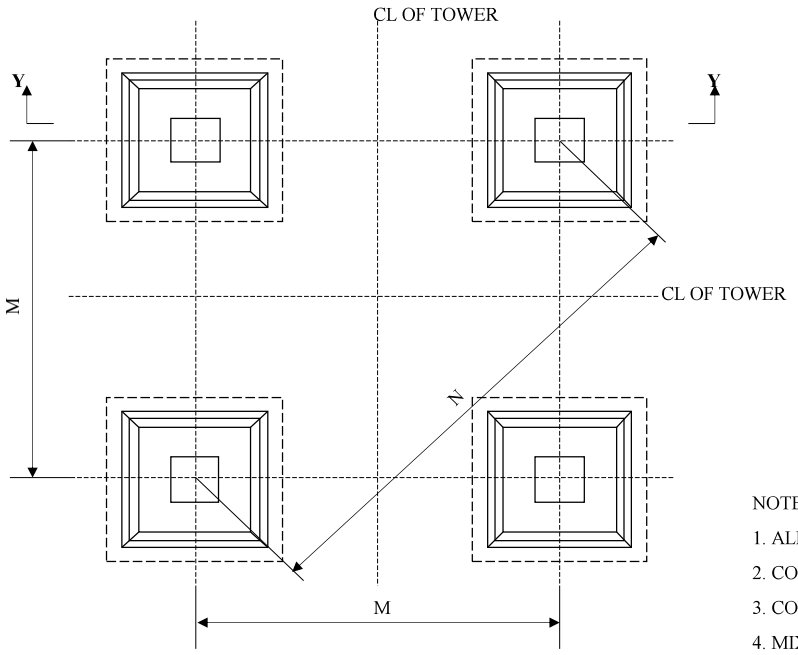

PLAN

DETAILS OF FOUNDATION

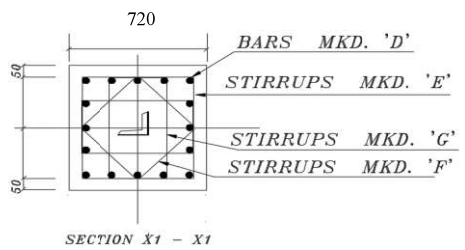

NOTES

1. ALL DIMENSIONS ARE IN MM. UNLESS OTHER WISE SPECIFIED
2. CONCRETE GRADE IS M 20 UNLESS OTHERWISE SPECIFIED.
3. CONCRETE COVER IS 50mm UNLESS OTHERWISE STATED.
4. MIX PROPERTIES CONFIRMING TO IS 456-2000.
5. STEEL USED IS Fe500 CONFORMING TO IS 1786, 1985 INDICATED AS 'TOR'
6. WHEREVER NECESSARY TO CLEAR STUB & CLEAT STIRRUPS ARE TO BE ADJUSTED AT SITE
7. FOR DETAILS OF STUB & CLEATS, REFER STUB DRAWING
8. **FOR ARRANGEMENT OF BARS REFER DRG. NO. CC:ENGG:TL:3 STEP:BAR ARRANGEMENT**

THIS DRAWING IS APPLICABLE ONLY FOR TOWER WITH EQUAL LEG/BODY EXTENSION AND SHALL NOT BE USED FOR UNEQUAL LEG EXTENSIONS.

This document is approved by ED-Engg. vide E-Office File No. CC-EgTL-15-12/0073/2023/NR Grp (Computer No. 700678), dated: 22/September/2023

पावरग्रिड POWERGRID
पावर ग्रिड कॉर्पोरेशन ऑफ इंडिया लिमिटेड (भारत सरकार का उद्यम)
POWER GRID CORPORATION OF INDIA LIMITED (A Government of India Enterprise)

Rev No	DATE	DESCRIPTION	ISSUED BY	CHKD	APPD

CLEARED BY			
S. DGM (ENGG-TL)	CGM (ENGG-TL)	ED (ENGG.)	DGM (ENGG-TL)
DATE	DESIGN	CHKD	

400 kV D/C Transmission Line with QUAD ACSR MOOSE NEW BUTWAL-GORAKHPUR TL

Title : Construction Drawing of Foundation
For Tower Type: DB (-6/-4.5/-3/-1.5/+0) Extn
Foundation Type :WET (+0M BODY EXTN.)
(WIND ZONE- 5)

Scale N.T.S
Drawing No. CC:ENGG:TL: 4522-41M-P-2-5701B

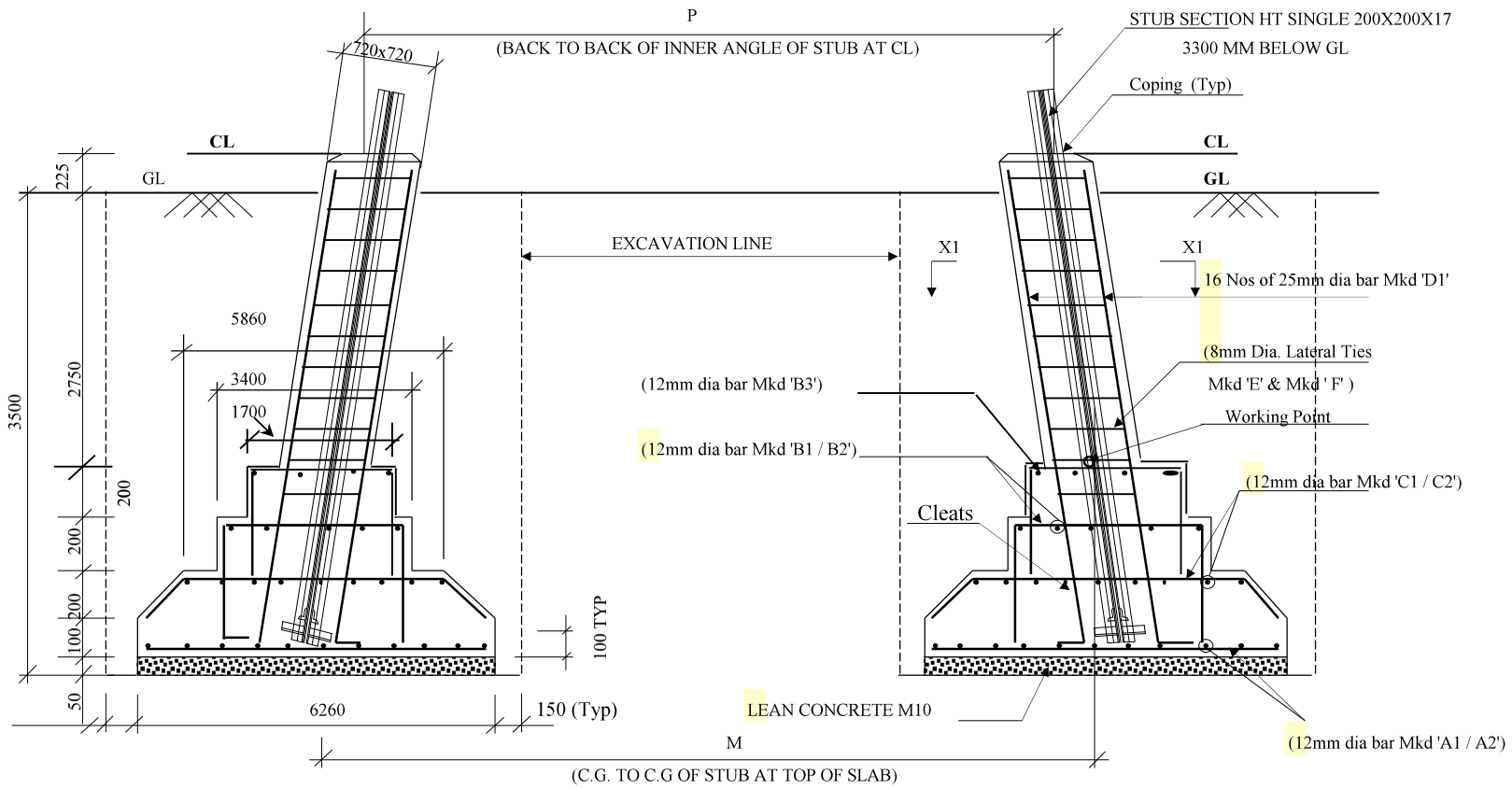

BAR BENDING SCHEDULE

Mkd No	SKETCH	Dia in MM	Length in MM	Nos/ Leg	Unit Wt (Kg/m)	Wt/ Leg (Kg)	Total weight (Kg)
A1	6160	12	6160	58	0.888	317.265	1269.060
A2	4960	12	4960	58	0.888	255.460	1021.840
B1	3300 (350, 100, 350)	12	4200	32	0.888	119.347	477.388
B2	3300 (350, 100, 350)	12		0	0.888	0.000	
B3	1600 (300, 100, 300)	12	2400	26	0.888	55.411	221.644
C1	5760 (233, 100, 233)	12	6426	28	0.888	159.776	639.104
C2	2224 (233)	12	2457	68	0.888	148.363	593.452
D1	3526 (300)	25	3826	16	3.853	235.865	943.460
D2	3526 (300)	0	3826	0	0.000	0.000	0.000
E	620, 620	8	2630	13	0.395	13.505	54.020
F	421	8	1834	13	0.395	9.418	37.672
G	620, 323	8	2036	26	0.395	20.910	83.640
H	0	8	150	0	0.395	0.000	0.000
						Total weight of steel required in Kg =	5341.280

Quantities / Tower

Excavation	=	602.47	cum.
Concrete (1:1.5:3)	=	62.79	cum.
Concrete (1:3:6)	=	7.84	cum.
Reinforcement	=	5341.28	kg

Excavation plan details Slope = 0.2607

Level	CG of stub	P in mm	M in mm	N in mm
-6 M	55.6	14296	15732	22248
-4.5 M	55.6	15078	16514	23354
-3 M	55.6	15860	17296	24460
-1.5 M	55.6	16642	18078	25566
0 M	55.6	17424	18860	26672

THE FOUNDATION HAS BEEN DESIGNED
FOR FOLLOWING PARAMETERS
TYPES OF SOIL : PS
UNIT WEIGHT: 1440 / 940 Kg/CuM
BEARING CAPACITY : 13675 Kg/m2
ANGLE OF REPOSE: 30 / 15 Degrees
WATER TABLE = 0.75 TO 1.5 M FROM GL

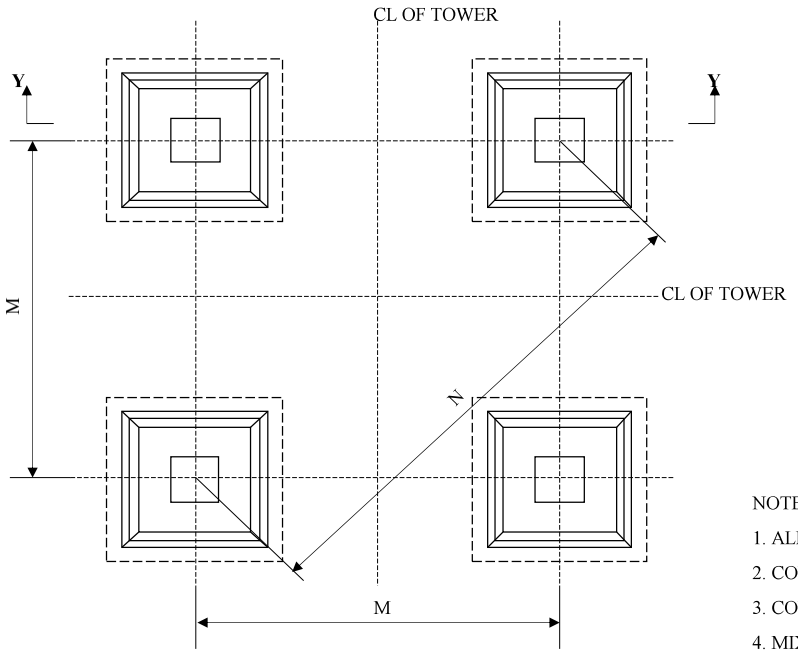

PLAN

DETAILS OF FOUNDATION

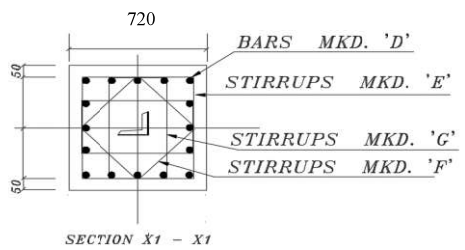

NOTES

1. ALL DIMENSIONS ARE IN MM. UNLESS OTHER WISE SPECIFIED
2. CONCRETE GRADE IS M 20 UNLESS OTHERWISE SPECIFIED.
3. CONCRETE COVER IS 50mm UNLESS OTHERWISE STATED.
4. MIX PROPERTIES CONFIRMING TO IS 456-2000.
5. STEEL USED IS Fe500 CONFORMING TO IS 1786, 1985 INDICATED AS 'TOR'
6. WHEREVER NECESSARY TO CLEAR STUB & CLEAT STIRRUPS ARE TO BE ADJUSTED AT SITE
7. FOR DETAILS OF STUB & CLEATS, REFER STUB DRAWING
8. **FOR ARRANGEMENT OF BARS REFER DRG. NO. CC:ENGG:TL:3 STEP:BAR ARRANGEMENT**

THIS DRAWING IS APPLICABLE ONLY FOR TOWER WITH EQUAL LEG/BODY EXTENSION AND SHALL NOT BE USED FOR UNEQUAL LEG EXTENSIONS.

This document is approved by ED-Engg. vide E-Office File No. CC-EgTL-15-12/0073/2023/NR Grp (Computer No. 700678), dated: 22/September/2023

पावरग्रिड POWERGRID
पावर ग्रिड कॉर्पोरेशन ऑफ इंडिया लिमिटेड
(भारत सरकार का उद्यम)
POWER GRID CORPORATION OF INDIA LIMITED
(A Government of India Enterprise)

Rev No	DATE	DESCRIPTION	ISSUED BY	CHKD	APPD

CLEARED BY			
S. DGM (ENGG-TL)	CGM (ENGG-TL)	ED (ENGG.)	DGM (ENGG-TL)
DATE	DESIGN	CHKD	

400 kV D/C Transmission Line with QUAD ACSR MOOSE NEW BUTWAL-GORAKHPUR TL

Title : Construction Drawing of Foundation
For Tower Type: DB (-6/-4.5/-3/-1.5/+0) Extn
Foundation Type :PS (+0M BODY EXTN.)
(WIND ZONE- 5)

Scale N.T.S
Drawing No. CC:ENGG:TL: 4522-41M-P-3-5701C

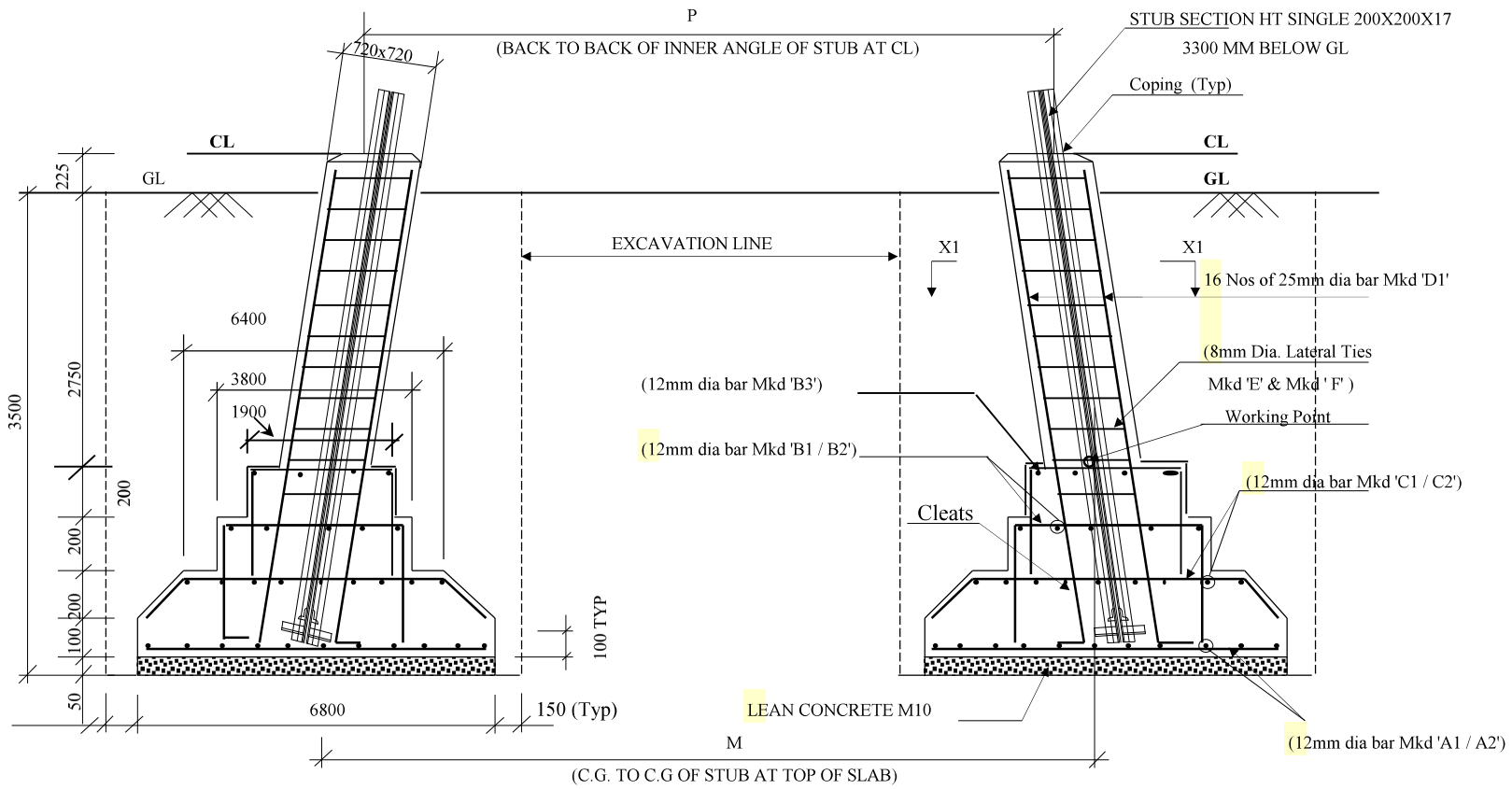

BAR BENDING SCHEDULE

Mkd No	SKETCH	Dia in MM	Length in MM	Nos/ Leg	Unit Wt (Kg/m)	Wt/ Leg (Kg)	Total weight (Kg)
A1	6700	12	6700	64	0.888	380.774	1523.096
A2	5360	12	5360	64	0.888	304.620	1218.480
B1	3700 (350, 100, 350)	12	4600	34	0.888	138.883	555.532
B2	3700 (350, 100, 350)	12		0	0.888	0.000	
B3	1800 (300, 100, 300)	12	2600	30	0.888	69.264	277.056
C1	6300 (233, 100, 233)	12	6966	28	0.888	173.203	692.812
C2	2394 (233)	12	2627	68	0.888	158.629	634.516
D1	3526 (300)	25	3826	16	3.853	235.865	943.460
D2	3526 (300)	0	3826	0	0.000	0.000	0.000
E	620 620	8	2630	13	0.395	13.505	54.020
F	421	8	1834	13	0.395	9.418	37.672
G	620 323	8	2036	26	0.395	20.910	83.640
H	0	8	150	0	0.395	0.000	0.000
						Total weight of steel required in Kg =	6020.284

Quantities / Tower

Excavation	=	705.74	cum.
Concrete (1:1.5:3)	=	73.96	cum.
Concrete (1:3:6)	=	9.25	cum.
Reinforcement	=	6020.28	kg

Excavation plan details Slope = 0.2607

Level	CG of stub	P in mm	M in mm	N in mm
-6 M	55.6	14296	15732	22248
-4.5 M	55.6	15078	16514	23354
-3 M	55.6	15860	17296	24460
-1.5 M	55.6	16642	18078	25566
0 M	55.6	17424	18860	26672

THE FOUNDATION HAS BEEN DESIGNED
FOR FOLLOWING PARAMETERS
TYPES OF SOIL : FS
UNIT WEIGHT: 1440 / 940 Kg/CuM
BEARING CAPACITY : 13675 Kg/m2
ANGLE OF REPOSE: 30 / 15 Degrees
WATER TABLE = 0.00 TO 0.75 M FROM GL

This document is approved by ED-Engg. vide E-Office File No. CC-EgTL-15-12/0073/2023/NR Grp (Computer No. 700678), dated: 22/September/2023

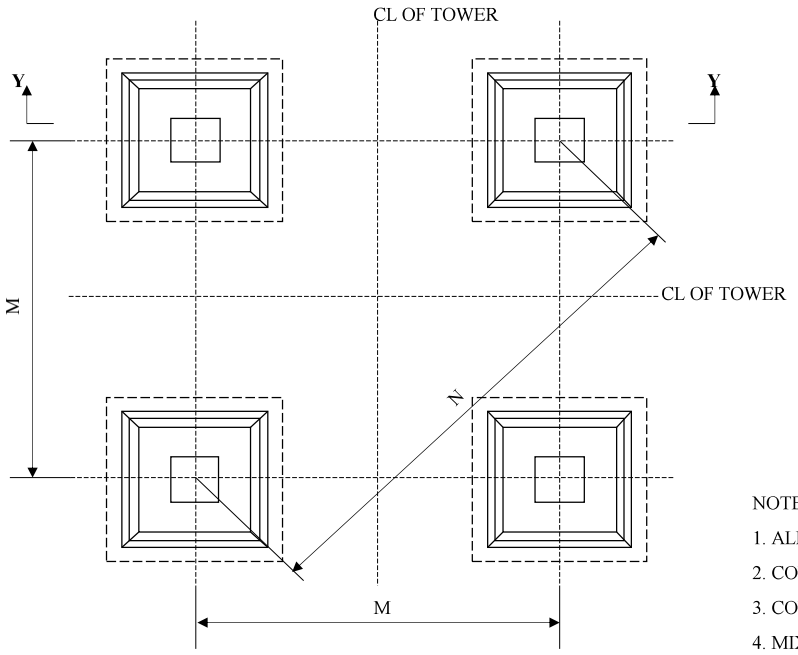

PLAN

DETAILS OF FOUNDATION

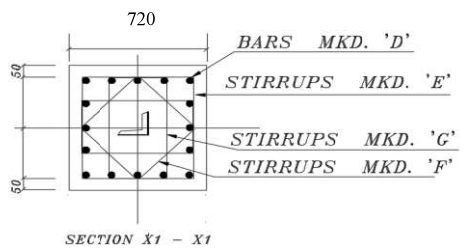

NOTES

1. ALL DIMENSIONS ARE IN MM. UNLESS OTHER WISE SPECIFIED
2. CONCRETE GRADE IS M 20 UNLESS OTHERWISE SPECIFIED.
3. CONCRETE COVER IS 50mm UNLESS OTHERWISE STATED.
4. MIX PROPERTIES CONFIRMING TO IS 456-2000.
5. STEEL USED IS Fe500 CONFORMING TO IS 1786, 1985 INDICATED AS 'TOR'
6. WHEREVER NECESSARY TO CLEAR STUB & CLEAT STIRRUPS ARE TO BE ADJUSTED AT SITE
7. FOR DETAILS OF STUB & CLEATS, REFER STUB DRAWING
8. **FOR ARRANGEMENT OF BARS REFER DRG. NO. CC:ENGG:TL:3 STEP:BAR ARRANGEMENT**

THIS DRAWING IS APPLICABLE ONLY FOR TOWER WITH EQUAL LEG/BODY EXTENSION AND SHALL NOT BE USED FOR UNEQUAL LEG EXTENSIONS.

पावरग्रिड POWERGRID
पावर ग्रिड कॉर्पोरेशन ऑफ इंडिया लिमिटेड
(भारत सरकार का उद्यम)
POWER GRID CORPORATION OF INDIA LIMITED
(A Government of India Enterprise)

400 kV D/C Transmission Line with QUAD ACSR MOOSE NEW BUTWAL-GORAKHPUR TL

Title : Construction Drawing of Foundation
For Tower Type: DB (-6/-4.5/-3/-1.5/+0) Extn
Foundation Type :FS (+0M BODY EXTN.)
(WIND ZONE- 5)

CLEARED BY			
S. DGM (ENGG-TL)	CGM (ENGG-TL)	ED (ENGG.)	DGM (ENGG-TL)

Rev No	DATE	DESCRIPTION	ISSUED BY	CHKD	APPD	DATE	DESIGN	CHKD

Scale: N.T.S
Drawing No. CC:ENGG:TL: 4522-41M-P-4-5701D

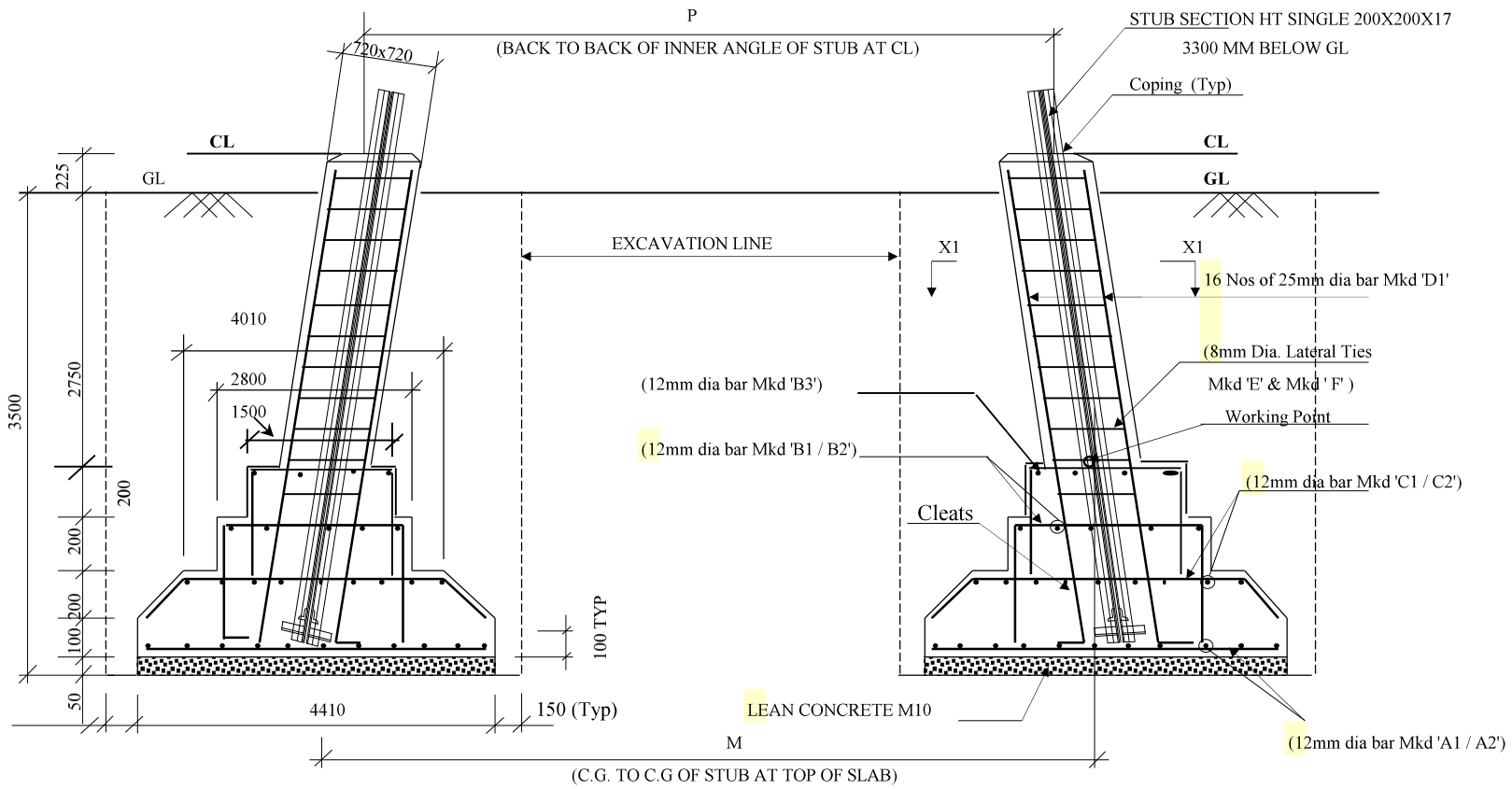

BAR BENDING SCHEDULE

Mkd No	SKETCH	Dia in MM	Length in MM	Nos/ Leg	Unit Wt (Kg/m)	Wt/ Leg (Kg)	Total weight (Kg)
A1	4310	12	4310	38	0.888	145.437	581.748
A2	3690	12	3690	38	0.888	124.515	498.060
B1	2700 (350, 100, 350)	12	3600	26	0.888	83.117	332.468
B2	2700 (350, 100, 350)	12		0	0.888	0.000	
B3	1400 (300, 100, 300)	12	2200	24	0.888	46.886	187.544
C1	3910 (233, 100, 233)	12	4576	12	0.888	48.762	195.048
C2	1399 (233)	12	1632	36	0.888	52.172	208.688
D1	3526 (300)	25	3826	16	3.853	235.865	943.460
D2	3526 (300)	0	3826	0	0.000	0.000	0.000
E	620, 620	8	2630	13	0.395	13.505	54.020
F	421	8	1834	13	0.395	9.418	37.672
G	620, 323	8	2036	26	0.395	20.910	83.640
H	0	8	150	0	0.395	0.000	0.000
						Total weight of steel required in Kg =	3122.348

Quantities / Tower

Excavation	=	310.58	cum.
Concrete (1:1.5:3)	=	36.21	cum.
Concrete (1:3:6)	=	3.89	cum.
Reinforcement	=	3122.35	kg

Excavation plan details Slope = 0.2607

Level	CG of stub	P in mm	M in mm	N in mm
-6 M	55.6	14296	15732	22248
-4.5 M	55.6	15078	16514	23354
-3 M	55.6	15860	17296	24460
-1.5 M	55.6	16642	18078	25566
0 M	55.6	17424	18860	26672

THE FOUNDATION HAS BEEN DESIGNED
FOR FOLLOWING PARAMETERS
TYPES OF SOIL : WET CULTIVATED
UNIT WEIGHT: 1440 / 1440 Kg/CuM
BEARING CAPACITY : 27350 Kg/m2
ANGLE OF REPOSE: 15 / 30 Degrees
WATER PENETRATION = 0.00 TO 1 M FROM GL

This document is approved by ED-Engg. vide E-Office File No. CC-EgTL-15-12/0073/2023/NR Grp (Computer No. 700678), dated: 22/September/2023

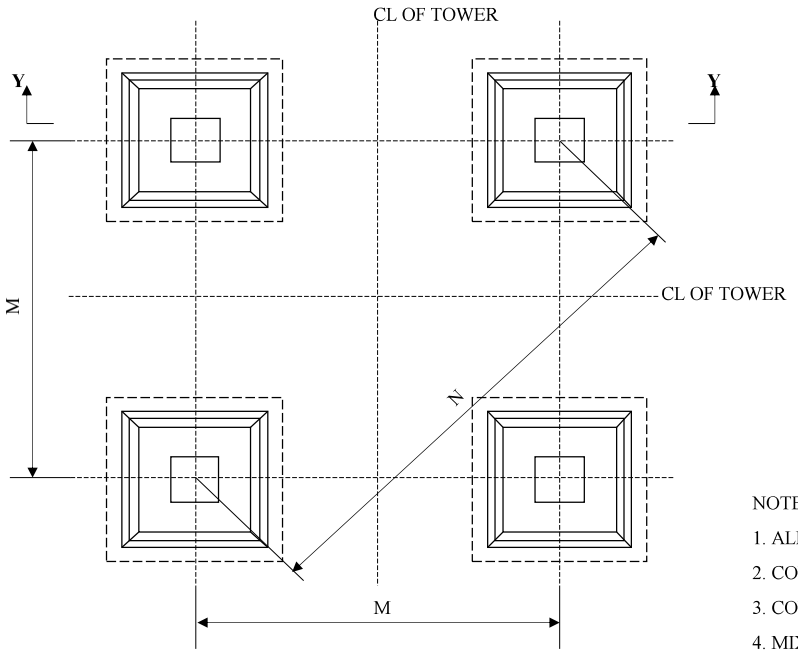

PLAN

DETAILS OF FOUNDATION

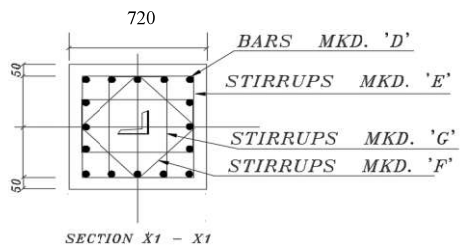

NOTES

1. ALL DIMENSIONS ARE IN MM. UNLESS OTHER WISE SPECIFIED
2. CONCRETE GRADE IS M 20 UNLESS OTHERWISE SPECIFIED.
3. CONCRETE COVER IS 50mm UNLESS OTHERWISE STATED.
4. MIX PROPERTIES CONFIRMING TO IS 456-2000.
5. STEEL USED IS Fe500 CONFORMING TO IS 1786, 1985 INDICATED AS 'TOR'
6. WHEREVER NECESSARY TO CLEAR STUB & CLEAT STIRRUPS ARE TO BE ADJUSTED AT SITE
7. FOR DETAILS OF STUB & CLEATS, REFER STUB DRAWING
8. **FOR ARRANGEMENT OF BARS REFER DRG. NO. CC:ENGG:TL:3 STEP:BAR ARRANGEMENT**

THIS DRAWING IS APPLICABLE ONLY FOR TOWER WITH EQUAL LEG/BODY EXTENSION AND SHALL NOT BE USED FOR UNEQUAL LEG EXTENSIONS.

पावरग्रिड POWERGRID
पावर ग्रिड कॉर्पोरेशन ऑफ इंडिया लिमिटेड
(भारत सरकार का उद्यम)
POWER GRID CORPORATION OF INDIA LIMITED
(A Government of India Enterprise)

CLEARED BY			
S. DGM (ENGG-TL)	CGM (ENGG-TL)	ED (ENGG.)	DGM (ENGG-TL)

400 kV D/C Transmission Line with QUAD ACSR MOOSE NEW BUTWAL-GORAKHPUR TL

Title : Construction Drawing of Foundation
For Tower Type: DB (-6/-4.5/-3/-1.5/+0) Extn
Foundation Type :WET CULTIVATED (+0M BODY EXT)
(WIND ZONE- 5)

Scale N.T.S
Drawing No. CC:ENGG:TL: 4522-41M-P-11-5701K

Rev No	DATE	DESCRIPTION	ISSUED BY	CHKD	APPD	DATE	DESIGN	CHKD	DGM (ENGG-TL)

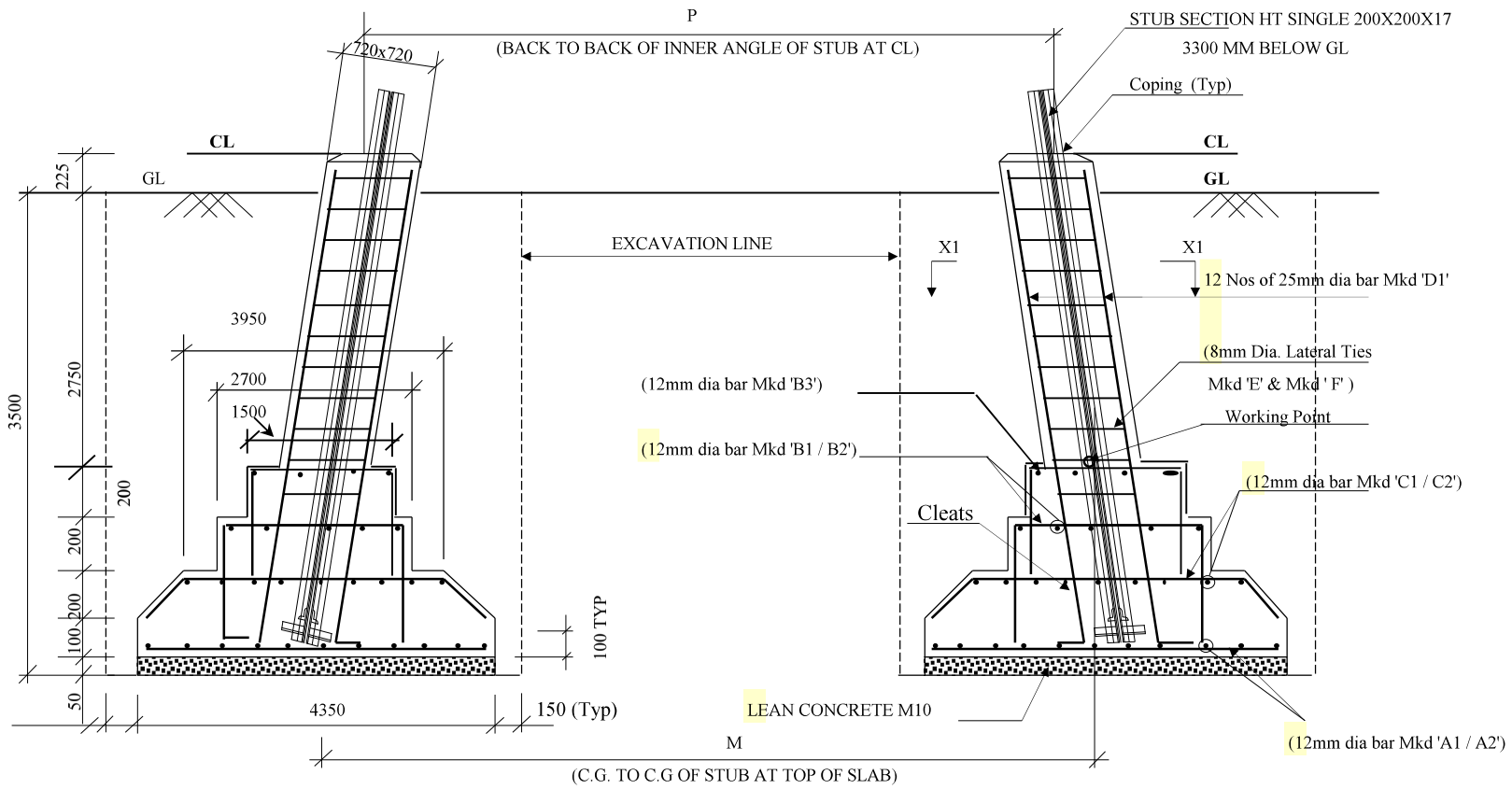

BAR BENDING SCHEDULE

Mkd No	SKETCH	Dia in MM	Length in MM	Nos/ Leg	Unit Wt (Kg/m)	Wt/ Leg (Kg)	Total weight (Kg)
A1	4250	12	4250	38	0.888	143.412	573.648
A2	3690	12	3690	38	0.888	124.515	498.060
B1	2600 (350, 100, 350)	12	3500	24	0.888	74.592	298.368
B2	2600 (350, 100, 350)	12		0	0.888	0.000	
B3	1400 (300, 100, 300)	12	2200	24	0.888	46.886	187.544
C1	3850 (233, 100, 233)	12	4516	12	0.888	48.122	192.488
C2	1369 (233)	12	1602	40	0.888	56.903	227.612
D1	3526 (300)	25	3826	12	3.853	176.899	707.596
D2	3526 (300)	0	3826	0	0.000	0.000	0.000
E	620, 620	8	2630	13	0.395	13.505	54.020
F	0	8	150	0	0.395	0.000	0.000
G	620, 290	8	1970	26	0.395	20.232	80.928
H	0	8	150	0	0.395	0.000	0.000
					Total weight of steel required in Kg =		2820.264

Quantities / Tower

Excavation	=	302.72	cum.
Concrete (1:1.5:3)	=	35.16	cum.
Concrete (1:3:6)	=	3.78	cum.
Reinforcement	=	2820.26	kg

Excavation plan details Slope = 0.2607

Level	CG of stub	P in mm	M in mm	N in mm
1.5 M	55.6	18206	19642	27778
3 M	55.6	18988	20424	28884
4.5 M	55.6	19770	21206	29990
6 M	55.6	20553	21988	31096
7.5 M	55.6	21335	22771	32203
9 M	55.6	22117	23553	33309

THE FOUNDATION HAS BEEN DESIGNED
FOR FOLLOWING PARAMETERS
TYPES OF SOIL : DRY
UNIT WEIGHT: 1440 / 1440 Kg/CuM
BEARING CAPACITY : 27350 Kg/m2
ANGLE OF REPOSE: 30 / 30 Degrees
WATER TABLE = > 3.5 M BELOW GL

This document is approved by ED-Engg. vide E-Office File No. CC-EgTL-15-12/0073/2023/NR Grp (Computer No. 700678), dated: 22/September/2023

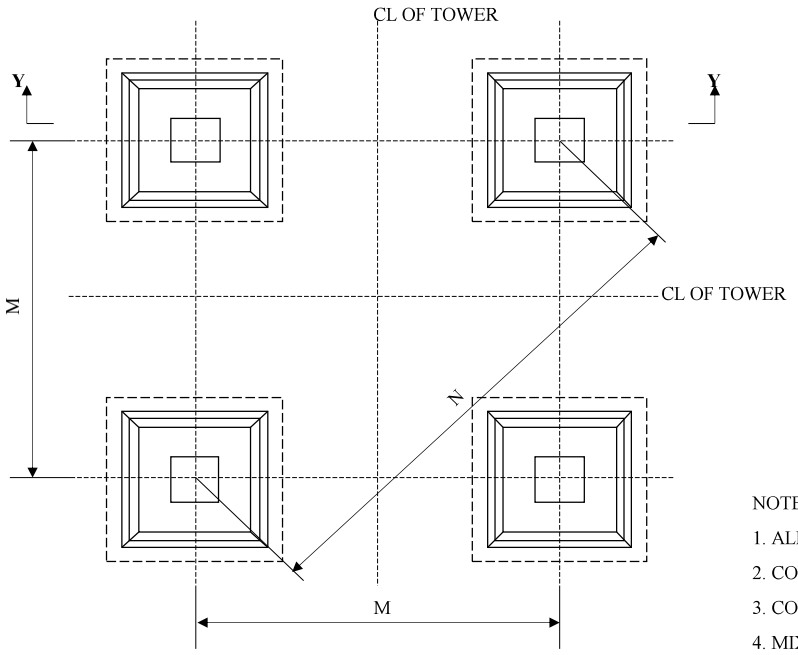

PLAN

DETAILS OF FOUNDATION

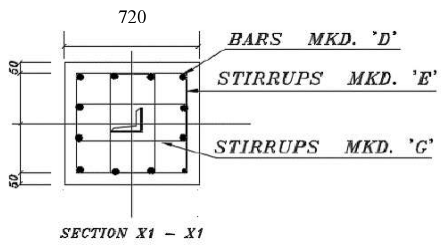

NOTES

1. ALL DIMENSIONS ARE IN MM. UNLESS OTHER WISE SPECIFIED
2. CONCRETE GRADE IS M 20 UNLESS OTHERWISE SPECIFIED.
3. CONCRETE COVER IS 50mm UNLESS OTHERWISE STATED.
4. MIX PROPERTIES CONFIRMING TO IS 456-2000.
5. STEEL USED IS Fe500 CONFORMING TO IS 1786, 1985 INDICATED AS 'TOR'
6. WHEREVER NECESSARY TO CLEAR STUB & CLEAT STIRRUPS ARE TO BE ADJUSTED AT SITE
7. FOR DETAILS OF STUB & CLEATS, REFER STUB DRAWING
8. **FOR ARRANGEMENT OF BARS REFER DRG. NO. CC:ENGG:TL:3 STEP:BAR ARRANGEMENT**

THIS DRAWING IS APPLICABLE ONLY FOR TOWER WITH EQUAL LEG/BODY EXTENSION AND SHALL NOT BE USED FOR UNEQUAL LEG EXTENSIONS.

पावरग्रिड POWERGRID
पावर ग्रिड कॉर्पोरेशन ऑफ इंडिया लिमिटेड
(भारत सरकार का उद्यम)
POWER GRID CORPORATION OF INDIA LIMITED
(A Government of India Enterprise)

CLEARED BY			
S. DGM (ENGG-TL)	CGM (ENGG-TL)	ED (ENGG.)	DGM (ENGG-TL)
DATE	DESIGN	CHKD	

400 kV D/C Transmission Line with QUAD ACSR MOOSE NEW BUTWAL-GORAKHPUR TL

Title : Construction Drawing of Foundation
For Tower Type: DB (+1.5/+3/+4.5/+6/+7.5/+9) Extn
Foundation Type :DRY (+9M BODY EXTN.)
(WIND ZONE- 5)

Scale N.T.S
Drawing No. CC:ENGG:TL: 4522-41M-P-1-5702A

Rev No	DATE	DESCRIPTION	ISSUED BY	CHKD	APPD

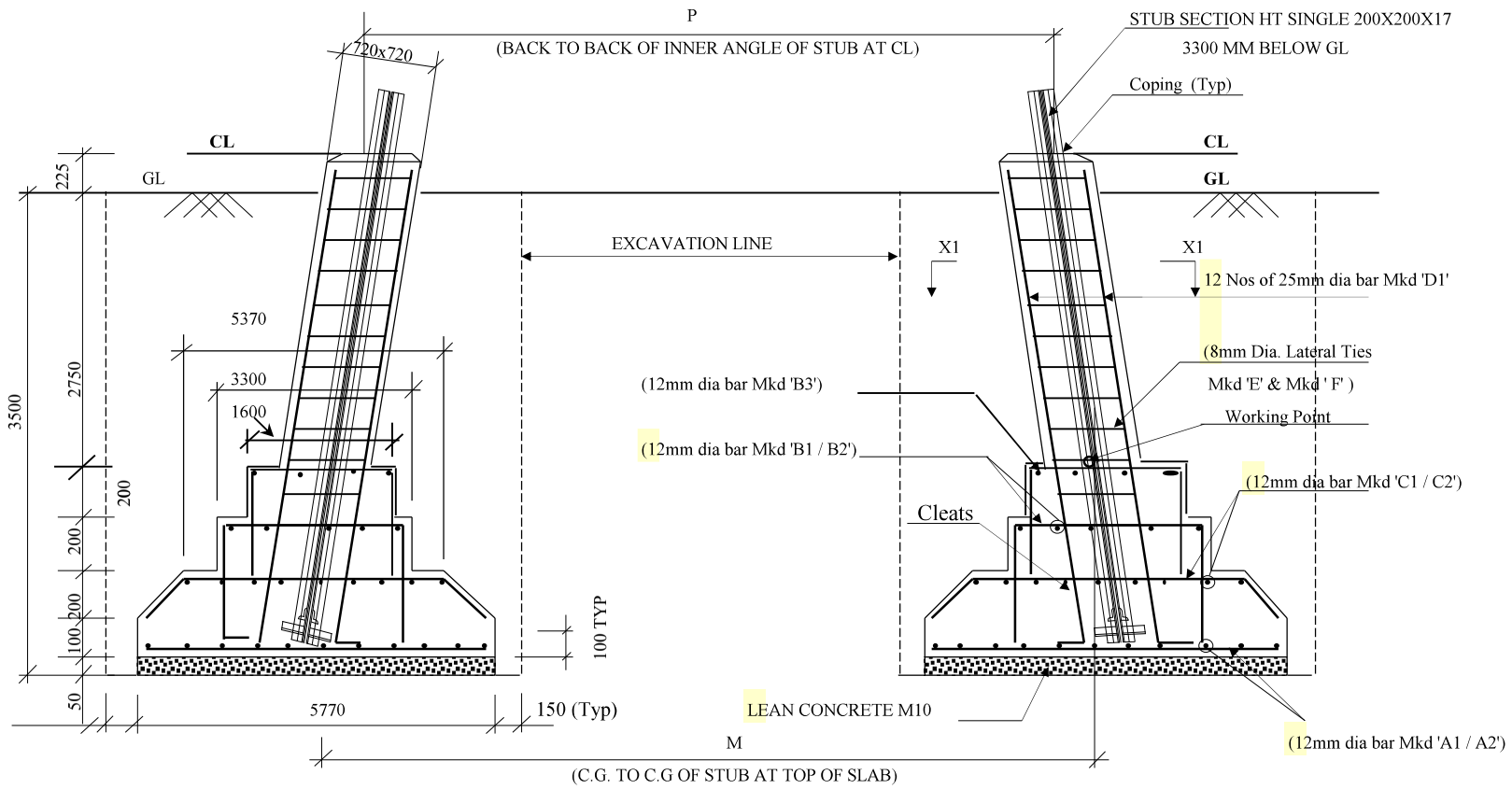

BAR BENDING SCHEDULE

Mkd No	SKETCH	Dia in MM	Length in MM	Nos/ Leg	Unit Wt (Kg/m)	Wt/ Leg (Kg)	Total weight (Kg)
A1	5670	12	5670	58	0.888	292.028	1168.112
A2	4670	12	4670	58	0.888	240.524	962.096
B1	3200 (350, 100, 350)	12	4100	30	0.888	109.224	436.896
B2	3200 (350, 100, 350)	12		0	0.888	0.000	
B3	1500 (300, 100, 300)	12	2300	24	0.888	49.018	196.072
C1	5270 (233, 100, 233)	12	5936	24	0.888	126.508	506.032
C2	2029 (233)	12	2262	56	0.888	112.485	449.940
D1	3526 (300)	25	3826	12	3.853	176.899	707.596
D2	3526 (300)	0	3826	0	0.000	0.000	0.000
E	620, 620	8	2630	13	0.395	13.505	54.020
F	0	8	150	0	0.395	0.000	0.000
G	620, 290	8	1970	26	0.395	20.232	80.928
H	0	8	150	0	0.395	0.000	0.000
					Total weight of steel required in Kg =		4561.692

Quantities / Tower

Excavation	=	515.83	cum.
Concrete (1:1.5:3)	=	55.08	cum.
Concrete (1:3:6)	=	6.66	cum.
Reinforcement	=	4561.69	kg

Excavation plan details Slope = 0.2607

Level	CG of stub	P in mm	M in mm	N in mm
1.5 M	55.6	18206	19642	27778
3 M	55.6	18988	20424	28884
4.5 M	55.6	19770	21206	29990
6 M	55.6	20553	21988	31096
7.5 M	55.6	21335	22771	32203
9 M	55.6	22117	23553	33309

THE FOUNDATION HAS BEEN DESIGNED
FOR FOLLOWING PARAMETERS

TYPES OF SOIL :	WET	
UNIT WEIGHT:	1440 / 940	Kg/CuM
BEARING CAPACITY :	13675	Kg/m2
ANGLE OF REPOSE:	30 / 15	Degrees
WATER TABLE	= 1.50 TO 3.5 M	FROM GL

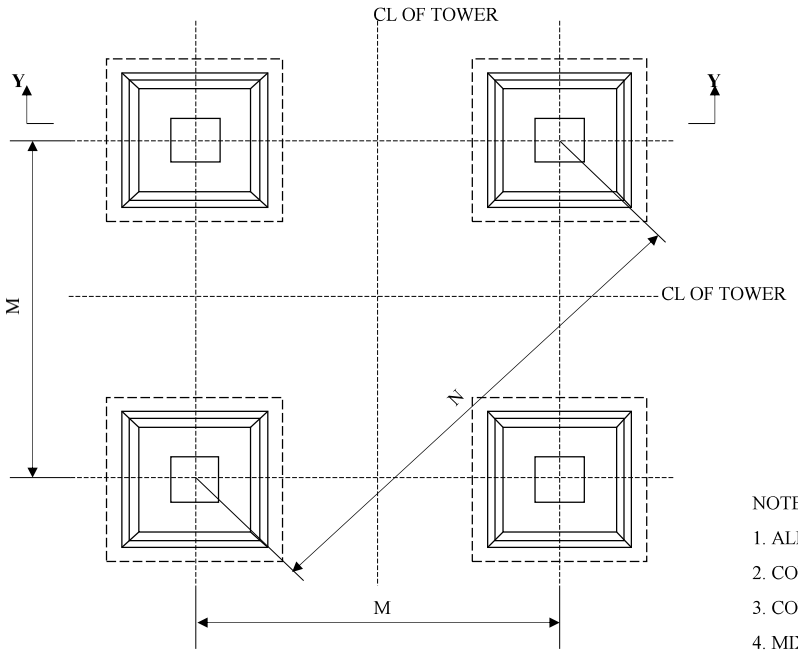

PLAN

DETAILS OF FOUNDATION

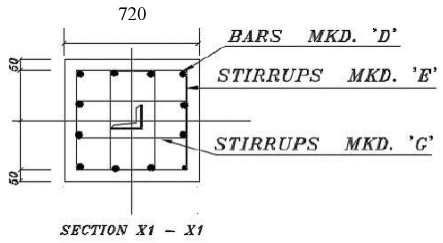

NOTES

1. ALL DIMENSIONS ARE IN MM. UNLESS OTHER WISE SPECIFIED
2. CONCRETE GRADE IS M 20 UNLESS OTHERWISE SPECIFIED.
3. CONCRETE COVER IS 50mm UNLESS OTHERWISE STATED.
4. MIX PROPERTIES CONFIRMING TO IS 456-2000.
5. STEEL USED IS Fe500 CONFORMING TO IS 1786, 1985 INDICATED AS 'TOR'
6. WHEREVER NECESSARY TO CLEAR STUB & CLEAT STIRRUPS ARE TO BE ADJUSTED AT SITE
7. FOR DETAILS OF STUB & CLEATS, REFER STUB DRAWING
8. **FOR ARRANGEMENT OF BARS REFER DRG. NO. CC:ENGG:TL:3 STEP:BAR ARRANGEMENT**

THIS DRAWING IS APPLICABLE ONLY FOR TOWER WITH EQUAL LEG/BODY EXTENSION AND SHALL NOT BE USED FOR UNEQUAL LEG EXTENSIONS.

This document is approved by ED-Engg. vide E-Office File No. CC-EgTL-15-12/0073/2023/NR Grp (Computer No. 700678), dated: 22/September/2023

पावरग्रिड POWERGRID
पावर ग्रिड कॉर्पोरेशन ऑफ इंडिया लिमिटेड
(भारत सरकार का उद्यम)
POWER GRID CORPORATION OF INDIA LIMITED
(A Government of India Enterprise)

Rev No	DATE	DESCRIPTION	ISSUED BY	CHKD	APPD

CLEARED BY			
S. DGM (ENGG-TL)	CGM (ENGG-TL)	ED (ENGG.)	DGM (ENGG-TL)
DATE	DESIGN	CHKD	

400 kV D/C Transmission Line with QUAD ACSR MOOSE NEW BUTWAL-GORAKHPUR TL

Title : Construction Drawing of Foundation
For Tower Type: DB (+1.5/+3/+4.5/+6/+7.5/+9) Extn
Foundation Type :WET (+9M BODY EXTN.)
(WIND ZONE- 5)

Scale N.T.S

Drawing No. CC:ENGG:TL: 4522-41M-P-2-5702B

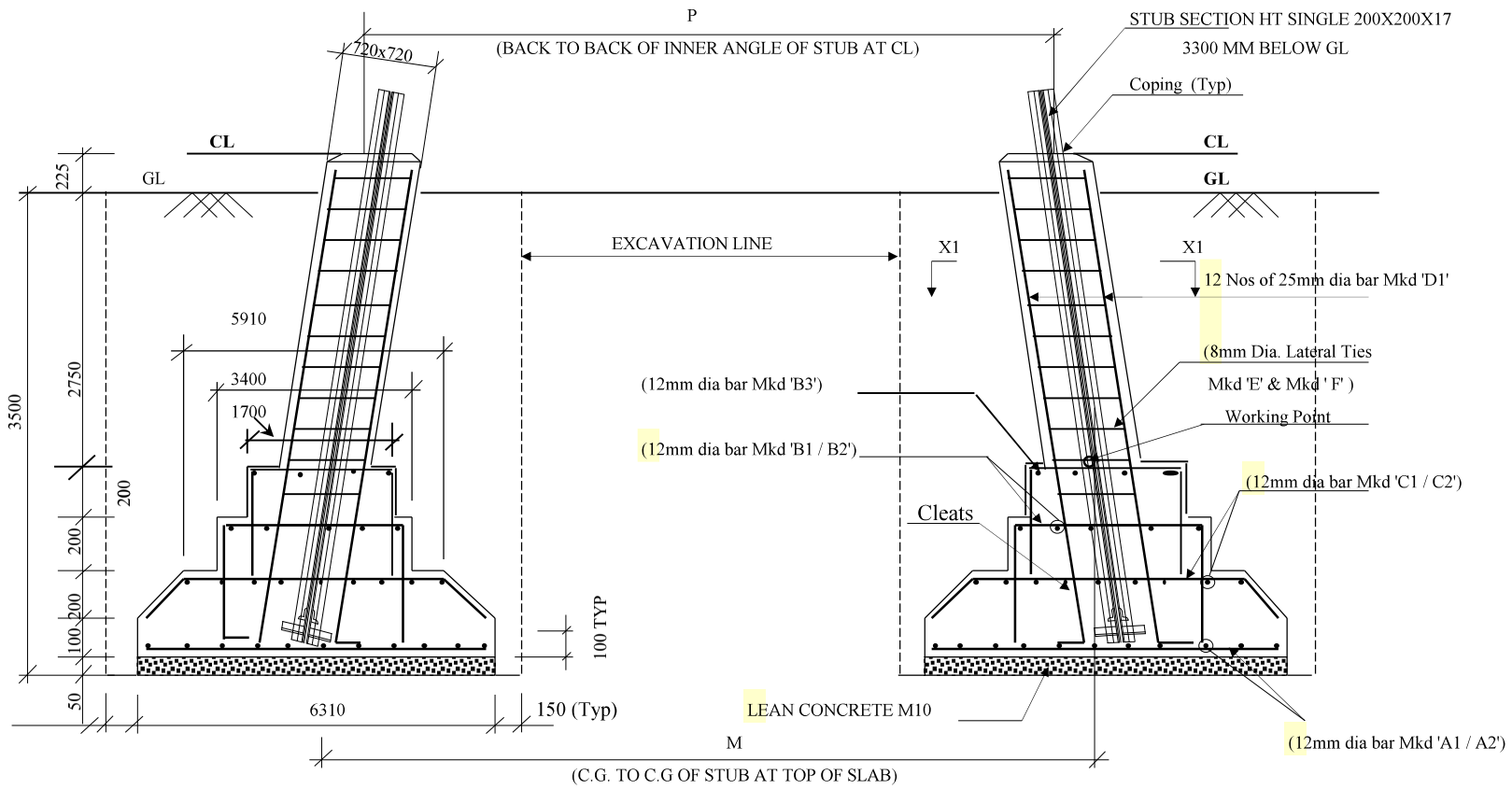

BAR BENDING SCHEDULE

Mkd No	SKETCH	Dia in MM	Length in MM	Nos/ Leg	Unit Wt (Kg/m)	Wt/ Leg (Kg)	Total weight (Kg)
A1	6210	12	6210	62	0.888	341.898	1367.592
A2	5050	12	5050	62	0.888	278.033	1112.132
B1	3300 (350, 100, 350)	12	4200	32	0.888	119.347	477.388
B2	3300 (350, 100, 350)	12		0	0.888	0.000	
B3	1600 (300, 100, 300)	12	2400	26	0.888	55.411	221.644
C1	5810 (233, 100, 233)	12	6476	32	0.888	184.022	736.088
C2	2249 (233)	12	2482	68	0.888	149.873	599.492
D1	3526 (300)	25	3826	12	3.853	176.899	707.596
D2	3526 (300)	0	3826	0	0.000	0.000	0.000
E	620, 620	8	2630	13	0.395	13.505	54.020
F	0	8	150	0	0.395	0.000	0.000
G	620, 290	8	1970	26	0.395	20.232	80.928
H	0	8	150	0	0.395	0.000	0.000
					Total weight of steel required in Kg =		5356.880

Quantities / Tower

Excavation	=	611.69	cum.
Concrete (1:1.5:3)	=	63.53	cum.
Concrete (1:3:6)	=	7.96	cum.
Reinforcement	=	5356.88	kg

Excavation plan details Slope = 0.2607

Level	CG of stub	P in mm	M in mm	N in mm
1.5 M	55.6	18206	19642	27778
3 M	55.6	18988	20424	28884
4.5 M	55.6	19770	21206	29990
6 M	55.6	20553	21988	31096
7.5 M	55.6	21335	22771	32203
9 M	55.6	22117	23553	33309

THE FOUNDATION HAS BEEN DESIGNED
FOR FOLLOWING PARAMETERS

TYPES OF SOIL :	PS	
UNIT WEIGHT:	1440 / 940	Kg/CuM
BEARING CAPACITY :	13675	Kg/m2
ANGLE OF REPOSE:	30 / 15	Degrees
WATER TABLE	= 0.75 TO 1.5 M	FROM GL

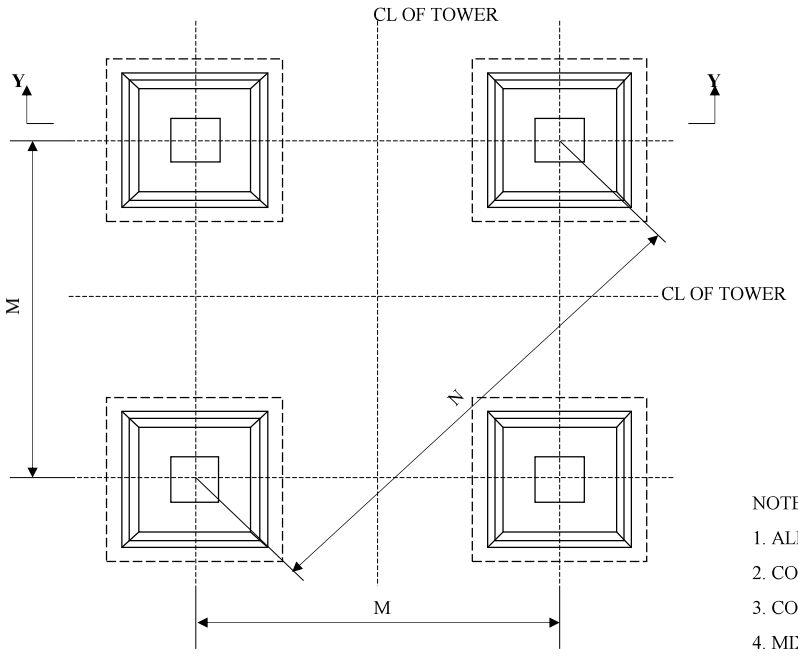

PLAN

DETAILS OF FOUNDATION

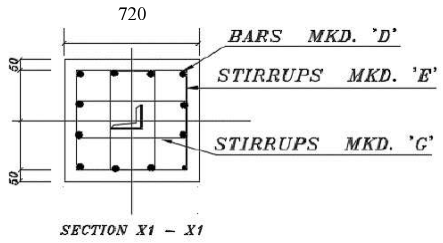

NOTES

1. ALL DIMENSIONS ARE IN MM. UNLESS OTHER WISE SPECIFIED
2. CONCRETE GRADE IS M 20 UNLESS OTHERWISE SPECIFIED.
3. CONCRETE COVER IS 50mm UNLESS OTHERWISE STATED.
4. MIX PROPERTIES CONFIRMING TO IS 456-2000.
5. STEEL USED IS Fe500 CONFORMING TO IS 1786, 1985 INDICATED AS 'TOR'
6. WHEREVER NECESSARY TO CLEAR STUB & CLEAT STIRRUPS ARE TO BE ADJUSTED AT SITE
7. FOR DETAILS OF STUB & CLEATS, REFER STUB DRAWING
8. **FOR ARRANGEMENT OF BARS REFER DRG. NO. CC:ENGG:TL:3 STEP:BAR ARRANGEMENT**

THIS DRAWING IS APPLICABLE ONLY FOR TOWER WITH EQUAL LEG/BODY EXTENSION AND SHALL NOT BE USED FOR UNEQUAL LEG EXTENSIONS.

This document is approved by ED-Engg. vide E-Office File No. CC-EgTL-15-12/0073/2023/NR Grp (Computer No. 700678), dated: 22/September/2023

पावरग्रिड POWERGRID
पावर ग्रिड कॉर्पोरेशन ऑफ इंडिया लिमिटेड
(भारत सरकार का उद्यम)
POWER GRID CORPORATION OF INDIA LIMITED
(A Government of India Enterprise)

CLEARED BY			
S. DGM (ENGG-TL)	CGM (ENGG-TL)	ED (ENGG.)	

Rev No	DATE	DESCRIPTION	ISSUED BY	CHKD	APPD	DATE	DESIGN	CHKD	DGM (ENGG-TL)

400 kV D/C Transmission Line with QUAD ACSR MOOSE NEW BUTWAL-GORAKHPUR TL

Title : Construction Drawing of Foundation
For Tower Type: DB (+1.5/+3/+4.5/+6/+7.5/+9) Extn
Foundation Type :PS (+9M BODY EXTN.)
(WIND ZONE- 5)

Scale N.T.S

Drawing No. CC:ENGG:TL: 4522-41M-P-3-5702C

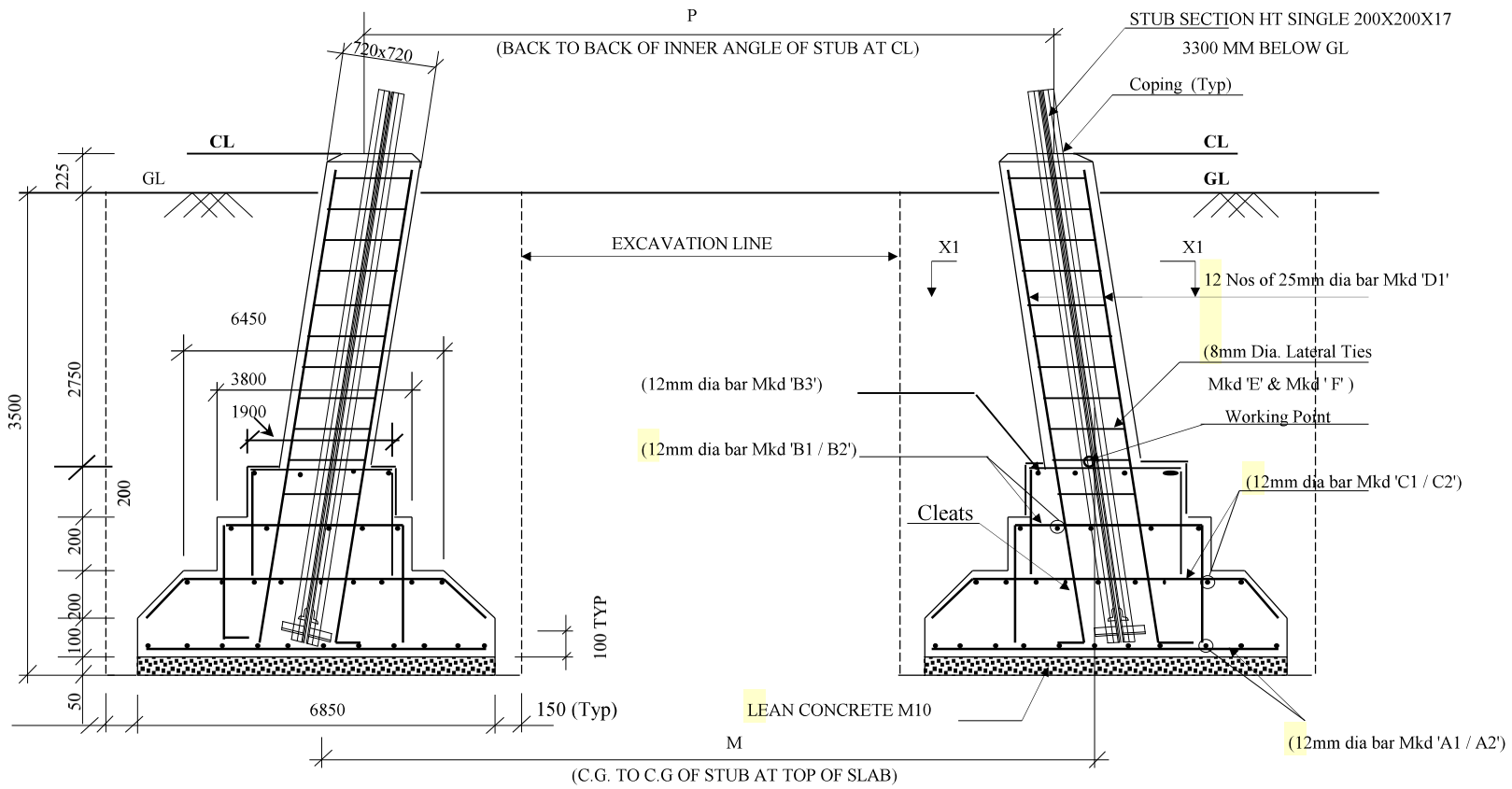

BAR BENDING SCHEDULE

Mkd No	SKETCH	Dia in MM	Length in MM	Nos/ Leg	Unit Wt (Kg/m)	Wt/ Leg (Kg)	Total weight (Kg)
A1	6750	12	6750	66	0.888	395.604	1582.416
A2	5470	12	5470	66	0.888	320.586	1282.344
B1	3700 (350, 100, 350)	12	4600	34	0.888	138.883	555.532
B2	3700 (350, 100, 350)	12		0	0.888	0.000	
B3	1800 (300, 100, 300)	12	2600	30	0.888	69.264	277.056
C1	6350 (233, 100, 233)	12	7016	32	0.888	199.367	797.468
C2	2419 (233)	12	2652	72	0.888	169.558	678.232
D1	3526 (300)	25	3826	12	3.853	176.899	707.596
D2	3526 (300)	0	3826	0	0.000	0.000	0.000
E	620, 620	8	2630	13	0.395	13.505	54.020
F	0	8	150	0	0.395	0.000	0.000
G	620, 290	8	1970	26	0.395	20.232	80.928
H	0	8	150	0	0.395	0.000	0.000
					Total weight of steel required in Kg =		6015.592

Quantities / Tower

Excavation	=	715.72	cum.
Concrete (1:1.5:3)	=	74.77	cum.
Concrete (1:3:6)	=	9.38	cum.
Reinforcement	=	6015.59	kg

Excavation plan details Slope = 0.2607

Level	CG of stub	P in mm	M in mm	N in mm
1.5 M	55.6	18206	19642	27778
3 M	55.6	18988	20424	28884
4.5 M	55.6	19770	21206	29990
6 M	55.6	20553	21988	31096
7.5 M	55.6	21335	22771	32203
9 M	55.6	22117	23553	33309

THE FOUNDATION HAS BEEN DESIGNED
FOR FOLLOWING PARAMETERS

TYPES OF SOIL :	FS	
UNIT WEIGHT:	1440 / 940	Kg/CuM
BEARING CAPACITY :	13675	Kg/m2
ANGLE OF REPOSE:	30 / 15	Degrees
WATER TABLE	= 0.00 TO 0.75 M FROM GL	

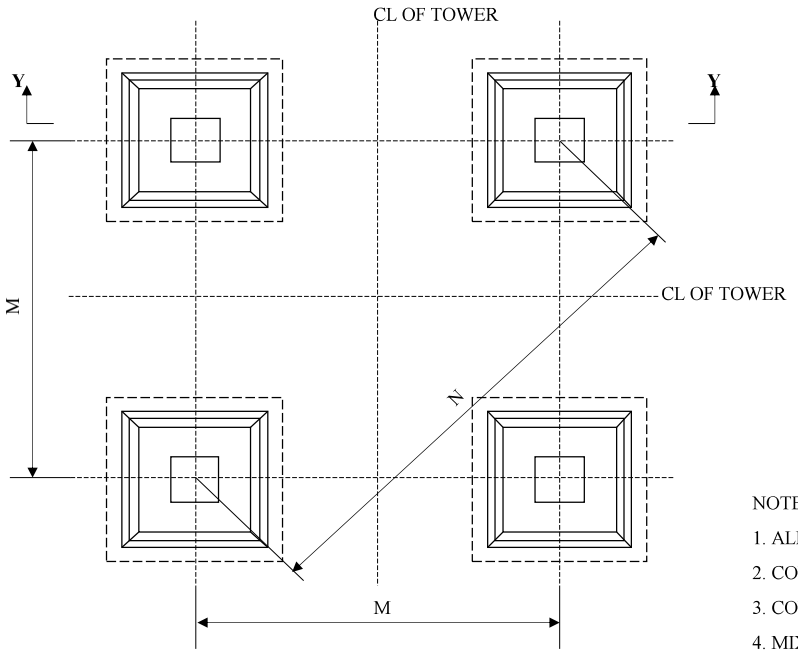

PLAN

DETAILS OF FOUNDATION

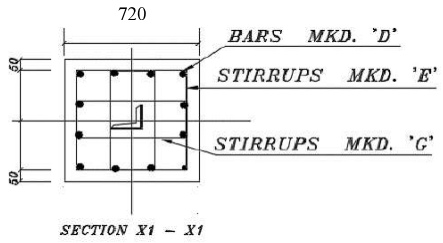

NOTES

1. ALL DIMENSIONS ARE IN MM. UNLESS OTHER WISE SPECIFIED
2. CONCRETE GRADE IS M 20 UNLESS OTHERWISE SPECIFIED.
3. CONCRETE COVER IS 50mm UNLESS OTHERWISE STATED.
4. MIX PROPERTIES CONFIRMING TO IS 456-2000.
5. STEEL USED IS Fe500 CONFORMING TO IS 1786, 1985 INDICATED AS 'TOR'
6. WHEREVER NECESSARY TO CLEAR STUB & CLEAT STIRRUPS ARE TO BE ADJUSTED AT SITE
7. FOR DETAILS OF STUB & CLEATS, REFER STUB DRAWING
8. **FOR ARRANGEMENT OF BARS REFER DRG. NO. CC:ENGG:TL:3 STEP:BAR ARRANGEMENT**

THIS DRAWING IS APPLICABLE ONLY FOR TOWER WITH EQUAL LEG/BODY EXTENSION AND SHALL NOT BE USED FOR UNEQUAL LEG EXTENSIONS.

This document is approved by ED-Engg. vide E-Office File No. CC-EgTL-15-12/0073/2023/NR Grp (Computer No. 700678), dated: 22/September/2023

पावरग्रिड POWERGRID
पावर ग्रिड कॉर्पोरेशन ऑफ इंडिया लिमिटेड
(भारत सरकार का उद्यम)
POWER GRID CORPORATION OF INDIA LIMITED
(A Government of India Enterprise)

Rev No	DATE	DESCRIPTION	ISSUED BY	CHKD	APPD

CLEARED BY			
S. DGM (ENGG-TL)	CGM (ENGG-TL)	ED (ENGG.)	DGM (ENGG-TL)
DATE	DESIGN	CHKD	

400 kV D/C Transmission Line with QUAD ACSR MOOSE NEW BUTWAL-GORAKHPUR TL

Title : Construction Drawing of Foundation
For Tower Type: DB (+1.5/+3/+4.5/+6/+7.5/+9) Extn
Foundation Type :FS (+9M BODY EXTN.)
(WIND ZONE- 5)

Scale N.T.S

Drawing No. CC:ENGG:TL: 4522-41M-P-4-5702D

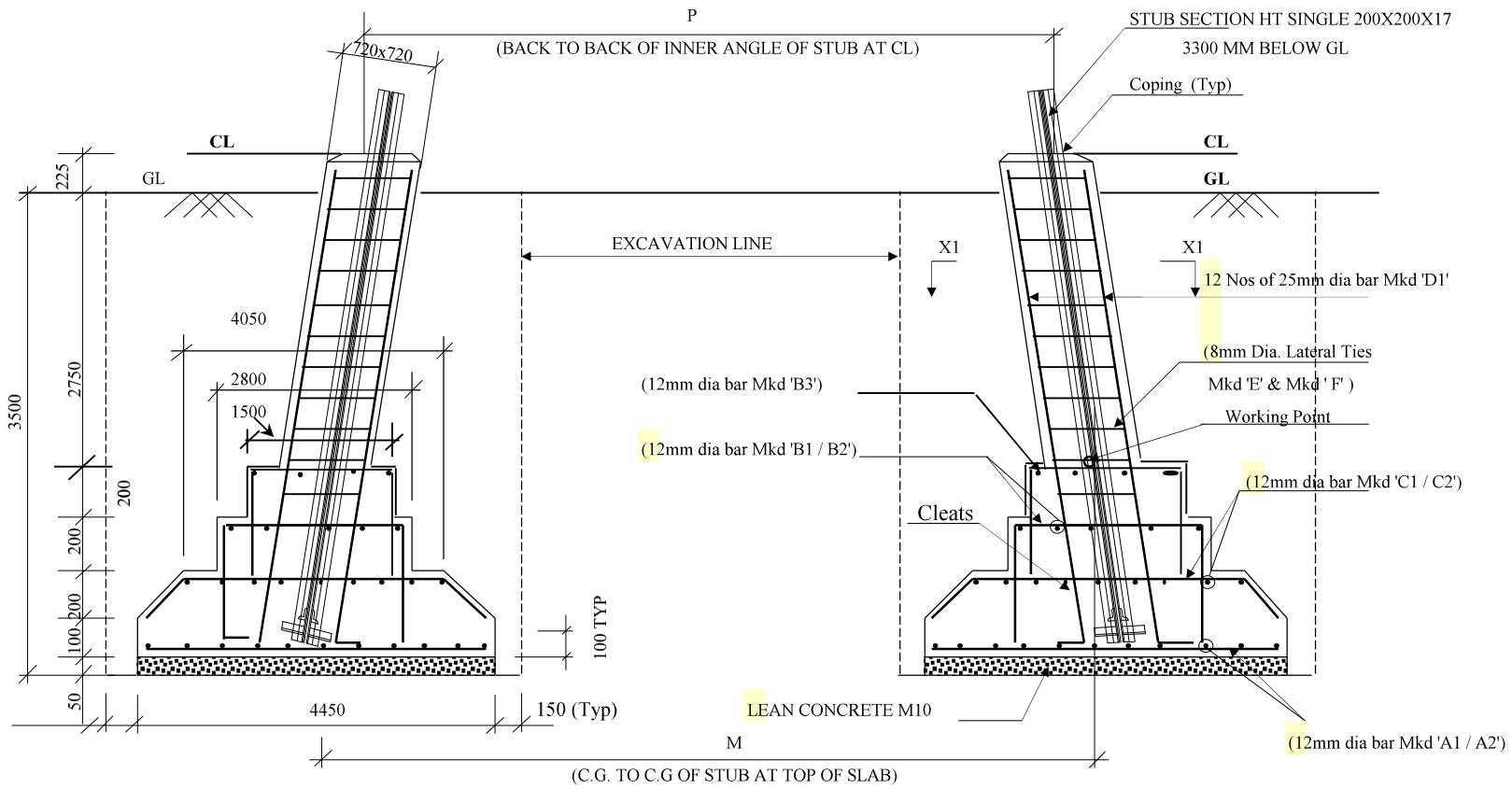

BAR BENDING SCHEDULE

Mkd No	SKETCH	Dia in MM	Length in MM	Nos/ Leg	Unit Wt (Kg/m)	Wt/ Leg (Kg)	Total weight (Kg)
A1	4350	12	4350	40	0.888	154.512	618.048
A2	3750	12	3750	40	0.888	133.200	532.800
B1	2700 (350, 100, 350)	12	3600	26	0.888	83.117	332.468
B2	2700 (350, 100, 350)	12		0	0.888	0.000	
B3	1400 (300, 100, 300)	12	2200	24	0.888	46.886	187.544
C1	3950 (233, 100, 233)	12	4616	12	0.888	49.188	196.752
C2	1419 (233)	12	1652	40	0.888	58.679	234.716
D1	3526 (300)	25	3826	12	3.853	176.899	707.596
D2	3526 (300)	0	3826	0	0.000	0.000	0.000
E	620, 620	8	2630	13	0.395	13.505	54.020
F	0	8	150	0	0.395	0.000	0.000
G	620, 290	8	1970	26	0.395	20.232	80.928
H	0	8	150	0	0.395	0.000	0.000
					Total weight of steel required in Kg =		2944.872

Quantities / Tower

Excavation	=	315.88	cum.
Concrete (1:1.5:3)	=	36.62	cum.
Concrete (1:3:6)	=	3.96	cum.
Reinforcement	=	2944.87	kg

Excavation plan details Slope = 0.2607

Level	CG of stub	P in mm	M in mm	N in mm
1.5 M	55.6	18206	19642	27778
3 M	55.6	18988	20424	28884
4.5 M	55.6	19770	21206	29990
6 M	55.6	20553	21988	31096
7.5 M	55.6	21335	22771	32203
9 M	55.6	22117	23553	33309

THE FOUNDATION HAS BEEN DESIGNED
FOR FOLLOWING PARAMETERS
TYPES OF SOIL : WET CULTIVATED
UNIT WEIGHT: 1440 / 1440 Kg/CuM
BEARING CAPACITY : 27350 Kg/m2
ANGLE OF REPOSE: 15 / 30 Degrees
WATER PENETRATION = 0.00 TO 1 M FROM GL

This document is approved by ED-Engg. vide E-Office File No. CC-EgTL-15-12/0073/2023/NR Grp (Computer No. 700678), dated: 22/September/2023

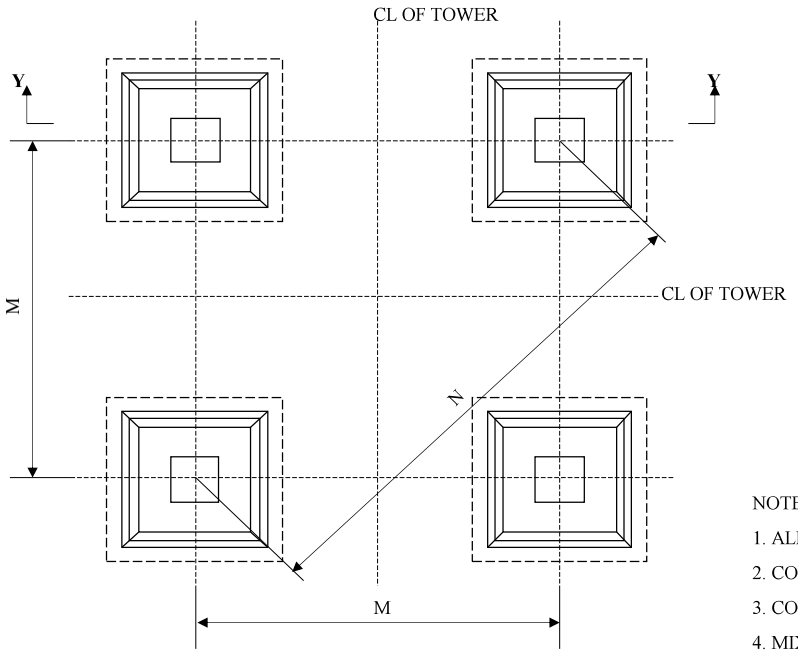

PLAN

DETAILS OF FOUNDATION

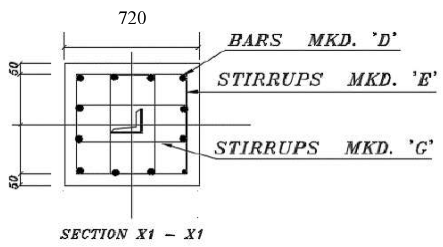

NOTES

1. ALL DIMENSIONS ARE IN MM. UNLESS OTHER WISE SPECIFIED
2. CONCRETE GRADE IS M 20 UNLESS OTHERWISE SPECIFIED.
3. CONCRETE COVER IS 50mm UNLESS OTHERWISE STATED.
4. MIX PROPERTIES CONFIRMING TO IS 456-2000.
5. STEEL USED IS Fe500 CONFORMING TO IS 1786, 1985 INDICATED AS 'TOR'
6. WHEREVER NECESSARY TO CLEAR STUB & CLEAT STIRRUPS ARE TO BE ADJUSTED AT SITE
7. FOR DETAILS OF STUB & CLEATS, REFER STUB DRAWING
8. **FOR ARRANGEMENT OF BARS REFER DRG. NO. CC:ENGG:TL:3 STEP:BAR ARRANGEMENT**

THIS DRAWING IS APPLICABLE ONLY FOR TOWER WITH EQUAL LEG/BODY EXTENSION AND SHALL NOT BE USED FOR UNEQUAL LEG EXTENSIONS.

पावरग्रिड POWERGRID
पावर ग्रिड कॉर्पोरेशन ऑफ इंडिया लिमिटेड
(भारत सरकार का उद्यम)
POWER GRID CORPORATION OF INDIA LIMITED
(A Government of India Enterprise)

Rev No	DATE	DESCRIPTION	ISSUED BY	CHKD	APPD

CLEARED BY			
S. DGM (ENGG-TL)	CGM (ENGG-TL)	ED (ENGG.)	DGM (ENGG-TL)
DATE	DESIGN	CHKD	

400 kV D/C Transmission Line with QUAD ACSR MOOSE NEW BUTWAL-GORAKHPUR TL

Title : Construction Drawing of Foundation
For Tower Type: DB (+1.5/+3/+4.5/+6/+7.5/+9) Extn
Foundation Type :WET CULTIVATED (+9M BODY EXT)
(WIND ZONE- 5)

Scale N.T.S

Drawing No. CC:ENGG:TL: 4522-41M-P-11-5702K